SHELBY G.T. 350

THE DIFFERENCE BETWEEN THE SHELBY G.T. 350 AND THE MUSTANG...plenty!

1 The cast aluminum high-rise manifold increases the engine's ability to breathe at high speeds and extends its useful power range. Matched to the manifold is a Holley low-restriction four-barrel carburetor with center pivot floats which prevent flooding or fuel starvation under the most severe driving conditions. **2** Custom aluminum Cobra rocker covers have excellent sound deadening qualities. **3** The Cobra cast and finned oil pan increases oil capacity, aids cooling and prevents oil surge during hard cornering, acceleration or braking. **4** The Borg Warner special Sebring close ratio four speed transmission is fully synchronized. **5** The breathing ability of the engine is improved further by the use of hand-made steel tube exhaust headers and low restriction, straight-through mufflers. **6** Inner pivots of the front wheel upper control arms are moved down one inch improving cornering power and bite. **7** Full one inch diameter anti-roll bar further increases roll stiffness and cornering ability. **8** Monte Carlo reinforcing bar plus extra heavy reinforcing yoke add body stability and strength under severe driving conditions. **9** A pair of torque reaction arms are added to take the burden of acceleration and braking forces and allow the springs to handle the weight of the car effectively. **10** At the front, Kelsey Hayes disc brakes are added with ventilated discs and special full competition pads. At the rear, the G.T. 350 has 10" drums with metallic linings. This combination is practically fade-free. Special wheels are mounted with 130 mph-rated Goodyear low profile high performance tires. **11** Heavy duty shock absorbers are adjustable. **12** Overall steering ratio is reduced from 21:1 to 19:1. **13** Competition-type locking studs and safety pins eliminate danger of the hood over flying open at high speeds.

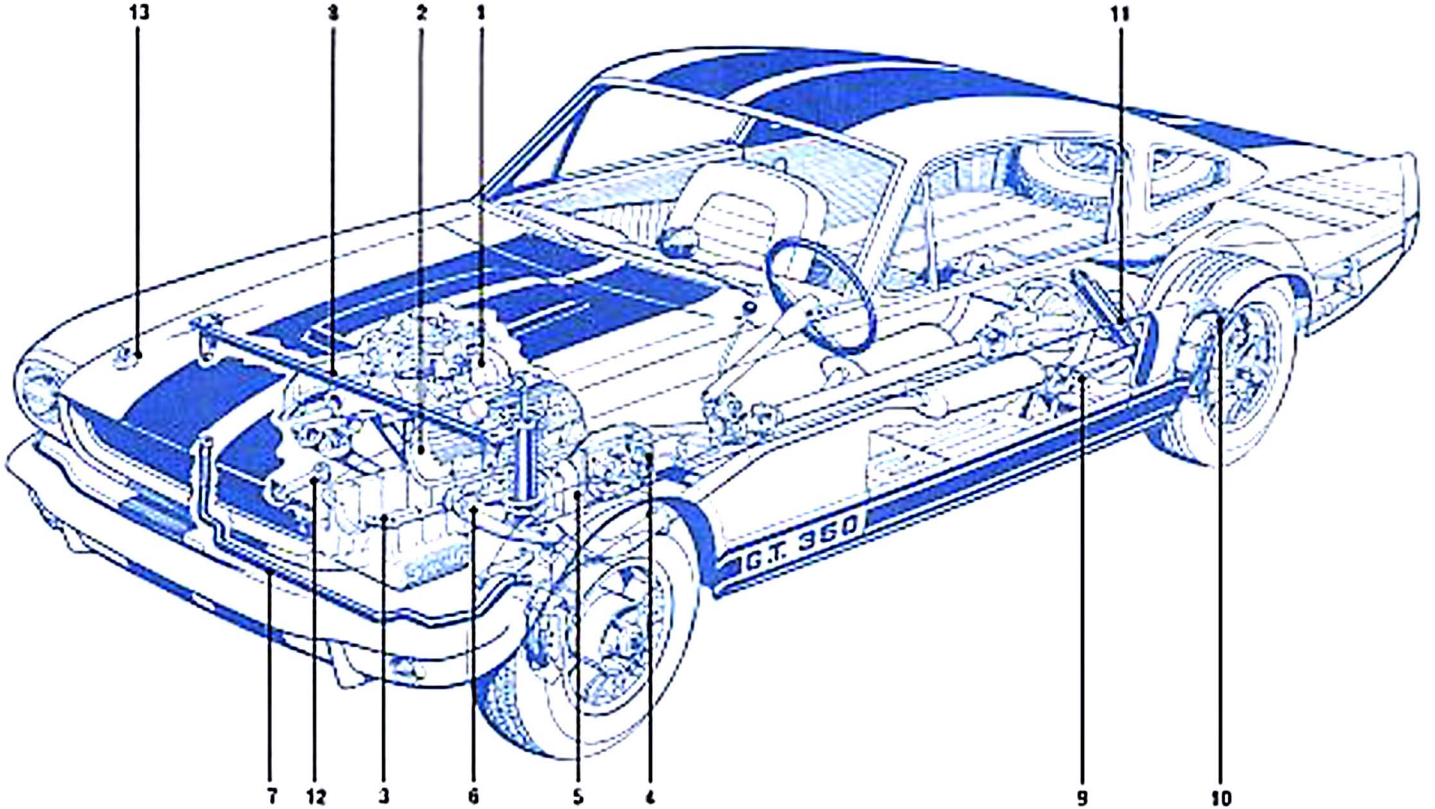

OPTIONS: Shelby aluminum wheels; "No-spin" limited slip differential; Competition striping; Automatic transmission; Folding rear seat.

You don't just make great cars. You breed them. Carroll Shelby, maker of the world-famous 1965 Manufacturer's Champion Cobra, took the Mustang Fastback and turned it into a snarling demon. First, he took the super-powered Ford 289 engine and "Cobra-ized" it...and he ended up with an unbelievable 306 charging horses. He redesigned the suspension geometry and came up with a car that handles with the ease of a street machine and the response-to-command of a competition car. The G.T. 350 is not everybody's car. Just yours.

New for '66...exclusive-with-Shelby, the rear quarter panel windows and brake air scoops set the G.T. 350 apart from every other car on the road.

The special hood air scoop supplies the efficient four-barrel carburetor that adds horsepower aplenty to the already powerful Ford 289.

The instrument panel is strictly driver oriented...in addition to the five dial instrumentation, Shelby adds a cowl mounted tachometer. The competition steering wheel gives you that racing feel and that styling flair. Heavy duty, three-inch seat belts are competition proved.

"Beefing" puts 35 more horses in the 289. This is accomplished with a Holley center pivot float four-barrel carburetor on a Cobra high riser intake manifold plus hand-built tubular steel exhaust headers leading into straight-through mufflers and twin pipes.

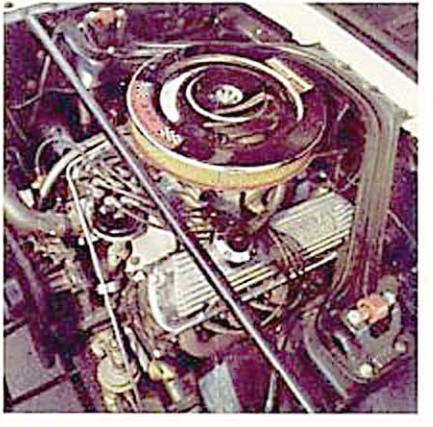

Take a look at performance. Zero to sixty miles per hour in 5.7 seconds makes the G.T. 350 the fastest production American stock car on the road.

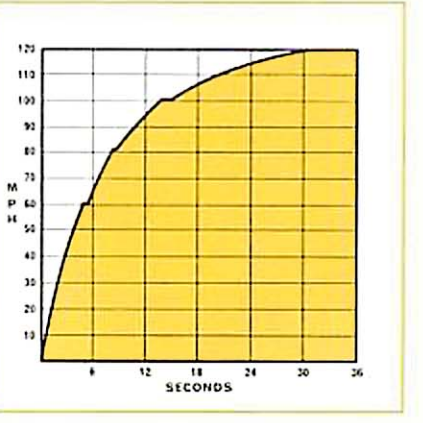

GO!

SHELBY AMERICAN, INC. / 6501 WEST IMPERIAL HIGHWAY / LOS ANGELES, CALIFORNIA